FEATURES

∗0.4 inch (10.0 mm) DIGIT HEIGHT.
∗CONTINUOUS UNIFORM SEGMENTS.
∗LOW POWER REQUIREMENT.
∗EXCELLENT CHARACTERS APPEARANCE.
∗HIGH BRIGHTNESS & HIGH CONTRAST.
∗WIDE VIEWING ANGLE.
∗SOLID STATE RELIABILITY.
∗CATEGORIZED FOR LUMINOUS INTENSITY.

DESCRIPTION

The LTD-4608JR is a 0.4 inch (10.0 mm) digit height dual digit seven-segment display. This device utilizes AlInGaP Super Red LED chips, which are made from AlInGaP on a non-transparent GaAs substrate, and has a gray face and white segments.

DEVICE

PART NO.	DESCRIPTION
AlInGaP Super Red	Duplex Common Anode
LTD-4608JR	Rt. Hand Decimal

PACKAGE DIMENSIONS

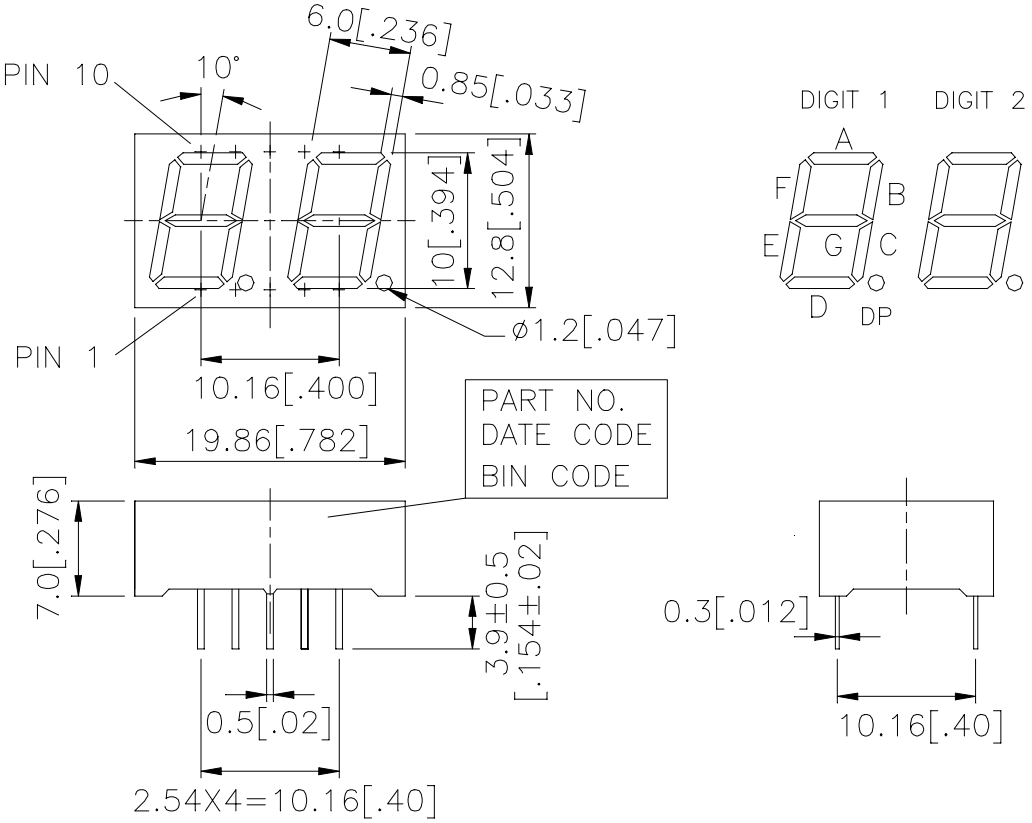

NOTES: All dimensions are in millimeters. Tolerances are± 0.25 mm (0.01“) unless otherwise noted.

INTERNAL CIRCUIT DIAGRAM

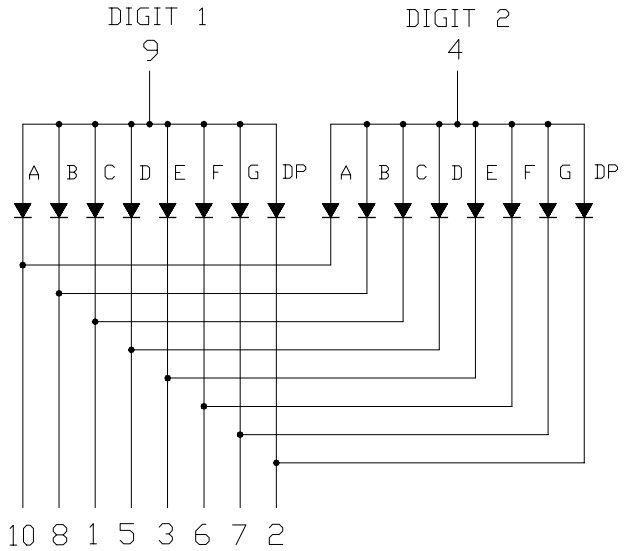

PIN CONNECTION

No	CONNECTION
1	CATHODE C
2	CATHODE D.P.
3	CATHODE E
4	COMMON ANODE (DIGIT 2)
5	CATHODE D
6	CATHODE F
7	CATHODE G
8	CATHODE B
9	COMMON ANODE (DIGIT 1)
10	CATHODE A

ABSOLUTE MAXIMUM RATING AT Ta=25°C

PARAMETER	MAXIMUM RATING	UNIT
Power Dissipation Per Segment	70	mW
Peak Forward Current Per Segment (1/10 Duty Cycle, 0.1ms Pulse Width)	90	mA
Continuous Forward Current Per Segment Derating Linear From 25℃ Per Segment	25 0.28	mA mA/℃
Reverse Voltage Per Segment	5	V
Operating Temperature Range	-35℃ to +105℃	
Storage Temperature Range	-35℃ to +105℃	
Solder Temperature: max 260℃ for max 3sec at 1.6mm below seating plane.		

ELECTRICAL / OPTICAL CHARACTERISTICS AT Ta=25°C

PARAMETER	SYMBOL	MIN.	TYP.	MAX.	UNIT	TEST CONDITION
Average Luminous Intensity	I_V	320	850		μcd	I_F=1mA
Peak Emission Wavelength	λp		639		nm	I_F=20mA
Spectral Line Half-Width	Δλ		20		nm	I_F=20mA
Dominant Wavelength	λd		631		nm	I_F=20mA
Forward Voltage Per Segment	V_F		2	2.6	V	I_F=20mA
Reverse Current Per Segment	I_R			100	μA	V_R=5V
Luminous Intensity Matching Ratio	I_V-m			2:1		I_F=1mA

Note: Luminous intensity is measured with a light sensor and filter combination that approximates the CIE (Commision Internationale De L'Eclairage) eye-response curve.

TYPICAL ELECTRICAL / OPTICAL CHARACTERISTIC CURVES

(25°C Ambient Temperature Unless Otherwise Noted)

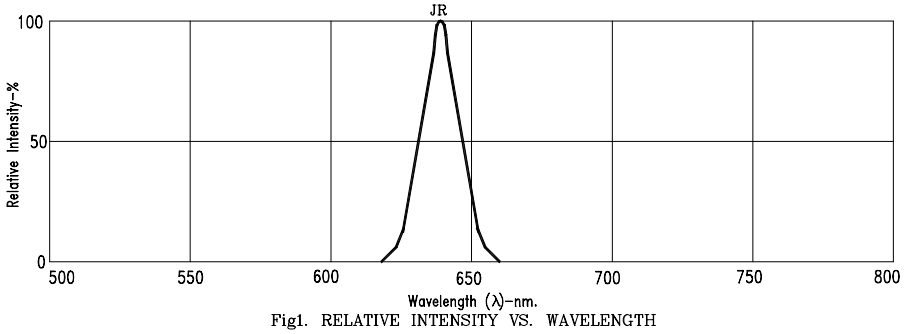

Fig1. RELATIVE INTENSITY VS. WAVELENGTH

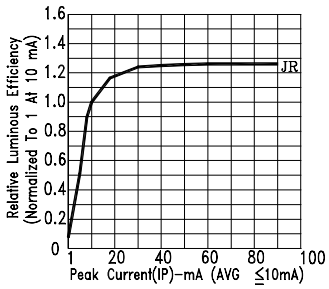

Fig2. RELATIVE LUMINOUS EFFICIENCY (LUMINOUS INTENSITY PER UNIT CURRENT) VS. PEAK CURRENT

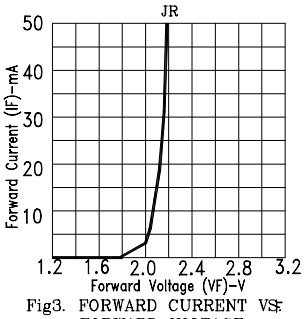

Fig3. FORWARD CURRENT VS. FORWARD VOLTAGE

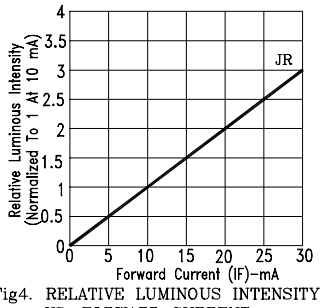

Fig4. RELATIVE LUMINOUS INTENSITY VS. FORWARD CURRENT

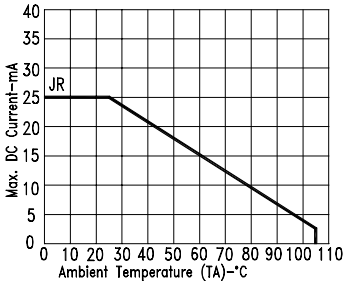

Fig5. MAX. ALLOWABLE DC CURRENT VS. AMBIENT TEMPERATURE.

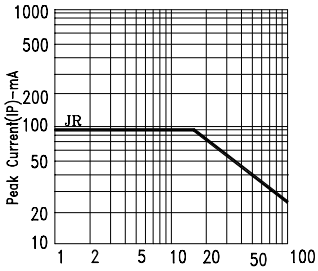

Fig6. MAX. PEAK CURRENT VS. DUTY CYCLE % (REFRESH RATE 1KHz)

NOTE : JR=AlInGaP SUPER RED